CRYST RAMA

1958

95 Cantiague Rock Road, Westbury NY 11590
ph:516.931.9090 fax: 516. 931.1254
info@crystorama.com www.crystorama.com

MODEL#:658
ASSEMBLY INSTRUCTIONS

WARNING:

All electrical components must be installed by a licensed electrician in accordance with the National Electric Code and the appropriate local electrical codes.

You will need 2 - Cand.Bulb
40 Watts Recommended
60 Watts Max
Bulb not included.

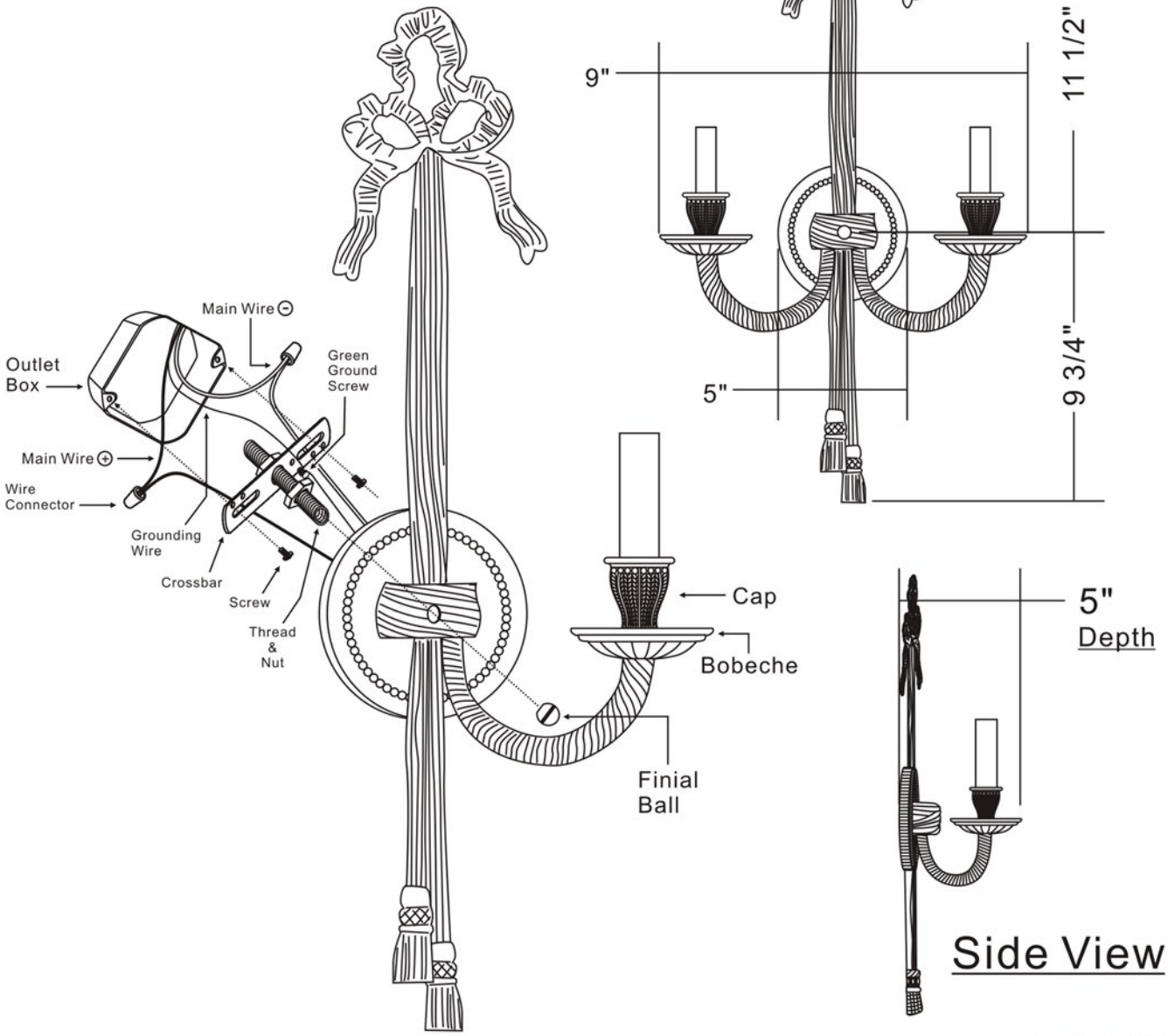

2011/12/06-V001