Bongo | 10010WLSN

Job Name:_____ Job Type:_____ Quantity:_____ Comments:_____

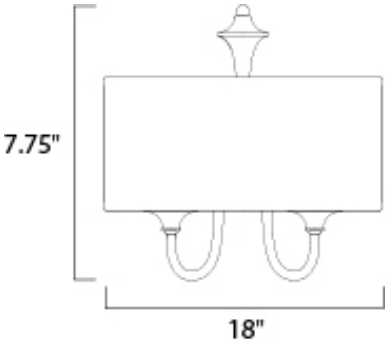

Measurements:

Height	Width	Length
7.75''	18.00''	18.00''

Hanging Weight

4.89 lb

Lamping:

Incandescent MB Incandescent

3.00 60W MB Incandescent

180 total watt

Dimmable : Standard

0 Rated Lumens

Color Temperature

Shipping:

Carton Weight	Carton Width	Carton Height	Carton Length
8.20 lb	21.50''	10.00''	21.50''

Master Pack Qty	UPC	UPS
1.0000	783209173514	Yes

Finish:

Satin Nickel SN

Material:

Steel

Certification:

Dry Location

Additional:

MB Incandescent (Not Included)