ASSEMBLY INSTRUCTIONS

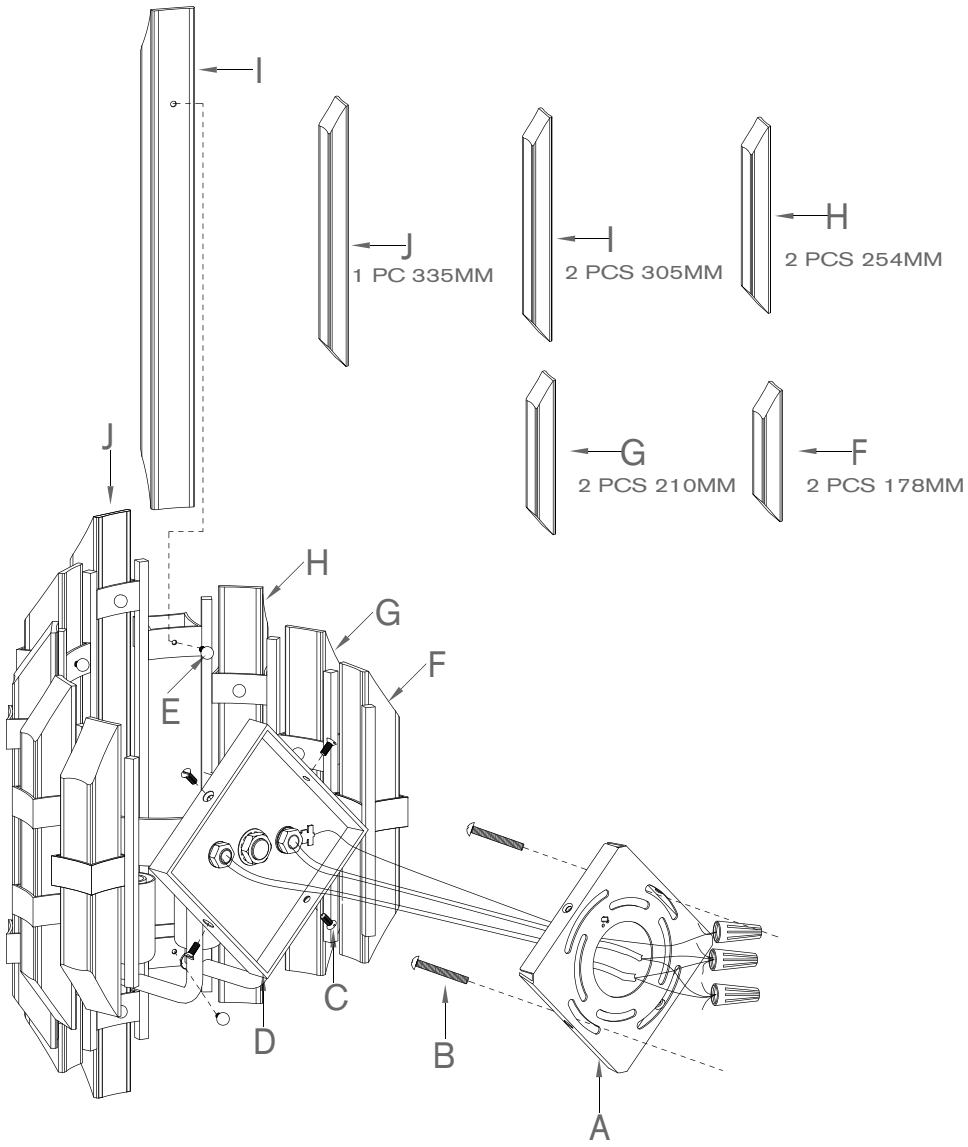

Adele Sconce
Item # SK2400

WE RECOMMEND INSTALLATION OF THIS LIGHTING FIXTURE BE DONE BY A LICENSED ELECTRICIAN.

WARNING * SWITCH OFF THE MAIN ELECTRICAL SUPPLY FROM THE MAIN FUSE BOX/CIRCUIT BREAKER BEFORE INSTALLATION.**

INSPECT ITEM CAREFULLY BEFORE ATTEMPTING TO INSTALL. IF THERE IS ANY DAMAGE OR OBVIOUS DEFECT, DO NOT INSTALL.

ITEM MAY NOT BE RETURNED ONCE IT HAS BEEN INSTALLED.

1. Carefully remove all parts from the carton.
2. Remove mounting plate (A) from base of light fixture (D) by removing base screws (C) in counter-clockwise direction.
3. Affix mounting plate (A) to wall outlet box with mounting screws (B) provided.
4. Attach ground (green or green/yellow) wire to ground wire from wall outlet box (usually green or copper in color), fasten together with a plastic wire connector. Tighten wrap the wire connector with electrical tape. so the end of the connector is sealed. IT IS IMPERATIVE THAT THE OUTLET BOX IN YOUR HOME BE PROPERLY GROUNDED.
5. Connect neutral (white) fixture wire coming from fixture base to neutral (usually white) outlet wire. Fasten both wires together with a plastic wire connector and tightly wrap the wire conncetor with electrical tape.
6. Repeat the procedure with the hot (black) wires. Always make sure that no wire strands are left outside the connectors. DO NOT REVERSE THE HOT AND NEUTRAL CONNECTIONS OTHERWISE SAFETY WILL BE COMPROMISED.
7. Attach fixture base (D) to the affixed mounting plate (A) and tighten with base screws (C).
8. Loosen set screws (E), insert acrylic rods (F) (G), (H), (I) and (G) into the light fixture by aligning the hole and secure by tightening set screws (E), make sure the location hole on side of crystal rods is on the upper side. Tighten by hand. DO NOT OVERTIGHTEN.
9. Insert light bulbs (not included) Type B, maximum 40 watt into sockets.

*** Clean with a dry, soft cloth only. Use no harsh abrasives or chemical agents.

Intertek DAMP

VISUAL COMFORT & CO. Est. 1987